VALLEY
BATH & KITCHEN

ELEMENT+

ACRYLIC ALL IN ONE PLUNGE BATHTUB

Product images are for illustration purposes only. Actual product(s) may vary.

MODEL No.	FINISH
976	GB GLOSS BLACK

DIMENSIONS	WATER DEPTH	CAPACITY
• Lenght: 76.77" / 1950mm • Width: 31.5" / 800mm • Height: 28" / 710mm	22" / 560mm	88 gal. 333 litres of water

PRODUCT INFORMATION:

Experience the extraordinary with our **Element +** All-in-one Glacier Chill Plunge. Dive into crystal-clear, icy-cold water at 3°C, transforming the ice bath into a thrilling adventure. Effortlessly installed, it transitions seamlessly to hot water up to 104°F. Enjoy year-round indulgence indoors or outdoors. Elevate your well-being in style.

DESCRIPTION

- Rectangular cold plunge bathtub
- Modern style
- Crack-resistant acrylic
- Off-set centred drain location
- Cover included
- High gloss finish

SHIPPING INFORMATION:

- Lenght: 69" / 1750mm
- Width: 33.5" / 850mm
- Height: 26" / 660mm
- Net Weight: 46 kg / 101 lbs
- Gross Weight: 56 kg / 123 lbs

ELEMENT GLACIER & THERMAL PLUNGE FEATURES

INDOOR OR OUTDOOR | CIRCULAR FILTRATION | COOLING DOWN TO 3C | WARMING UP TO 40C | 20 MICRON FILTER | OZONE SANITATION | NO PLUMBING REQUIRED | PLUG AND PLUNGE | FULLY INSULATED | LONG LASTING TUB | LED LIGHT

VOLTAGE	POWER	CURRENT
110V / 60HZ	1HP	8A

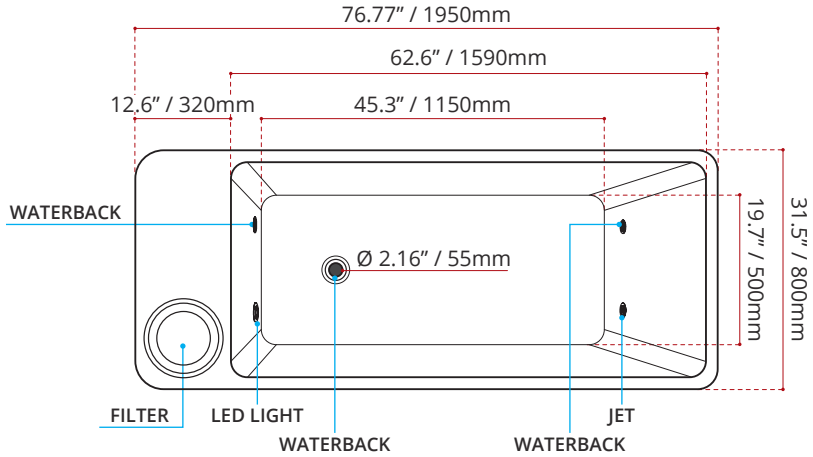

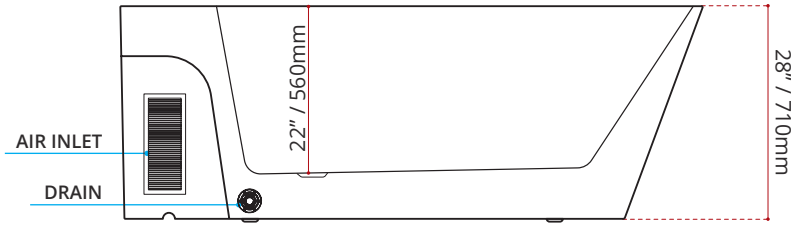

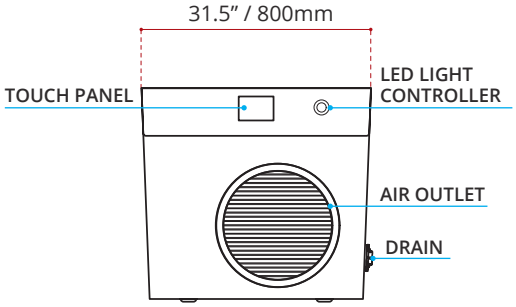

DISCLAIMER: Measurements may vary ± ¼" (Diagram Not to scale)

website: www.valleybathandkitchen.com • **E-mail:** customerservice@valleyacrylic.ca • **customer service call** Toll Free: 1.877.398.8827 • **Fax:** +1.604.820.0124